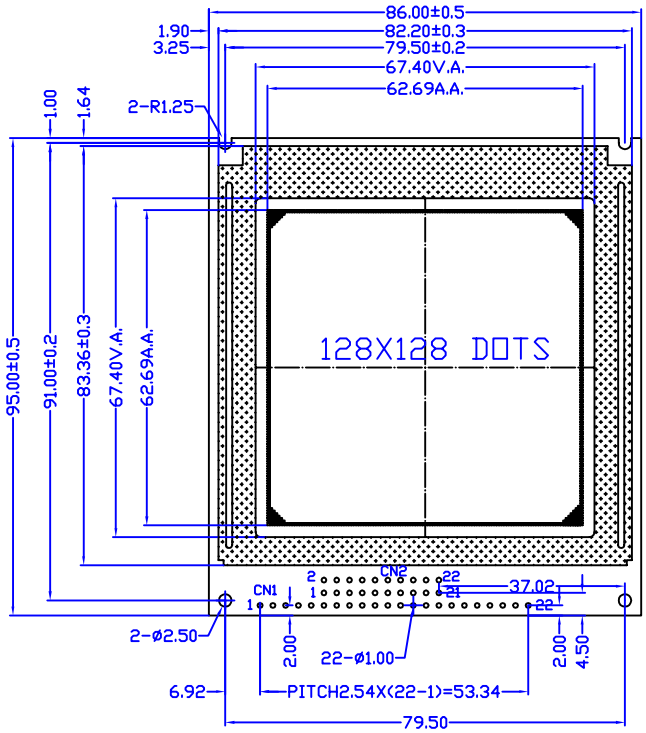

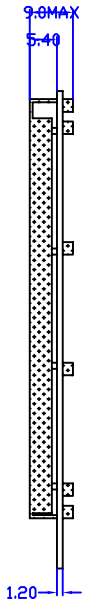

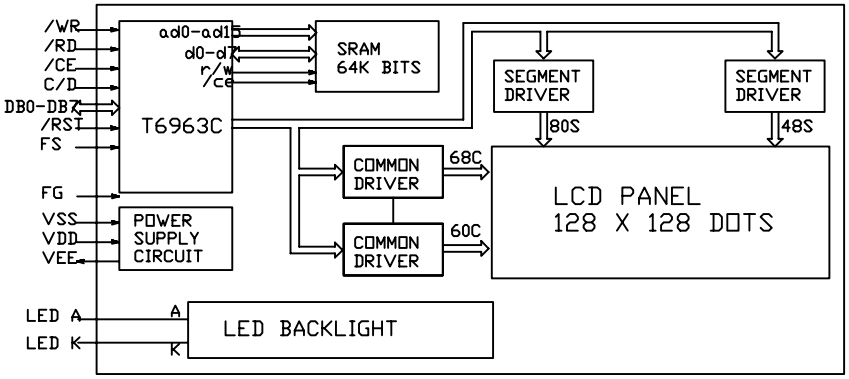

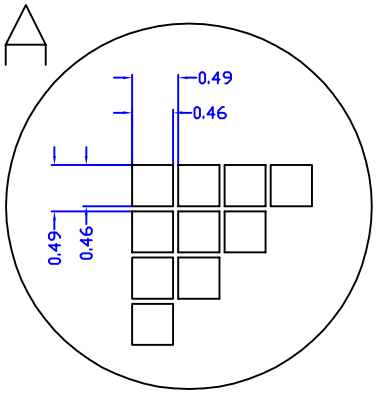

REVISIONS

NO.	DATE	BY	DESCRIPTION
1	05/12/20	GF ZH	NEW RELEASE

PINS ASSIGNMENT

NO.	SYSBOL	DESCRIPTION
1	FG	FRAME GROUND
2	VSS	GROUND
3	VDD	
4	V0	OPERATING VOLTAGE FOR LCD
5	/WR	DATA WRITE
6	/RD	DATA READ
7	/CE	CHIP ENABLE FOR T6963C
8	C/D	COMMAND/DATA SELECTION
9	NC	NO CONNECT
10	/RST	RESET T6963C (LOW EFFECTIVE)
11--18	DB0--DB7	DATA BUS
19	FS	FONT SELECTION (L:8X8, H:6X8)
20	VEE	NEGATIVE VOLTAGE INPUT/OUTPUT
21	BLA	POWER SUPPLY FOR BACKLIGHT (+)
22	BLK	POWER SUPPLY FOR BACKLIGHT (+)

ABSOLUTE MAXIMUM RATING

ITEM	SYMBOL	MIN	MAX	UNIT
POWER SUPPLY(LOGIC)	VDD-VSS	0	6.5	V
POWER SUPPLY(LCD DRV.)	VDD-V0	0	18.0	V
INPUT VOLTAGE	VI	VI	VDD	V

ELECTRICAL CHARACTERISTICS

ITEM		SYMBOL	MIN	TYP	MAX	UNIT
VOLTAGE FOR LOGIC		VDD-VSS	4.75	5.0	5.25	V
SUPPLY CURRENT		IDD	-	12.0	-	mA
LCD OPERATING VOLTAGE	0C	VDD-V0	-	19.0	-	V
	25C		-	18.0	-	V
	40C		-	17.5	-	V
INPUT VOLTAGE	H	VIH	0.7VDD	-	VDD	V
	L	VIL	0		0.3VDD	V

MECHANICAL SPECIFICATIONS

ITEM	SPECIFICATION	UNIT
OVERALL SIZE	85.0W x 100.0H x 14.0T	MM
VIEWING AREA	62.0W x 62.0H	MM
DOT NUMBER	128 x 128	DOTS
DOT SIZE	0.39W x 0.39H	MM
DOT PITCH	0.43W x 0.43H	MM

OPTIONS

1. LCD TYPE:GRAY MODE STN,POSITIVE
2. BACKLIGHT: SIDE LED BACKLIGHT
3. COLOR OF BACKLIGHT: Y/G;
4. TEMPERATURE RANGE: NORMAL(0--50C)
5. POWER SUPPLY: ON BOARD DC/DC(SINGLE 5.0V);
6.VIEWING ANGLE: 6H;

NT-G1281284A

128X128 DOTS GRAPHIC LCM

NELY

ALL DIMENSIONS ARE IN MM. TOLERANCE IS +/-0.2 UNLESS OTHERWISE NOTED.

WWW.NELYTECH.COM
NELY TECH CO.,LTD.
NELY, YOUR SUPPLIER, AND YOUR PARTNER!