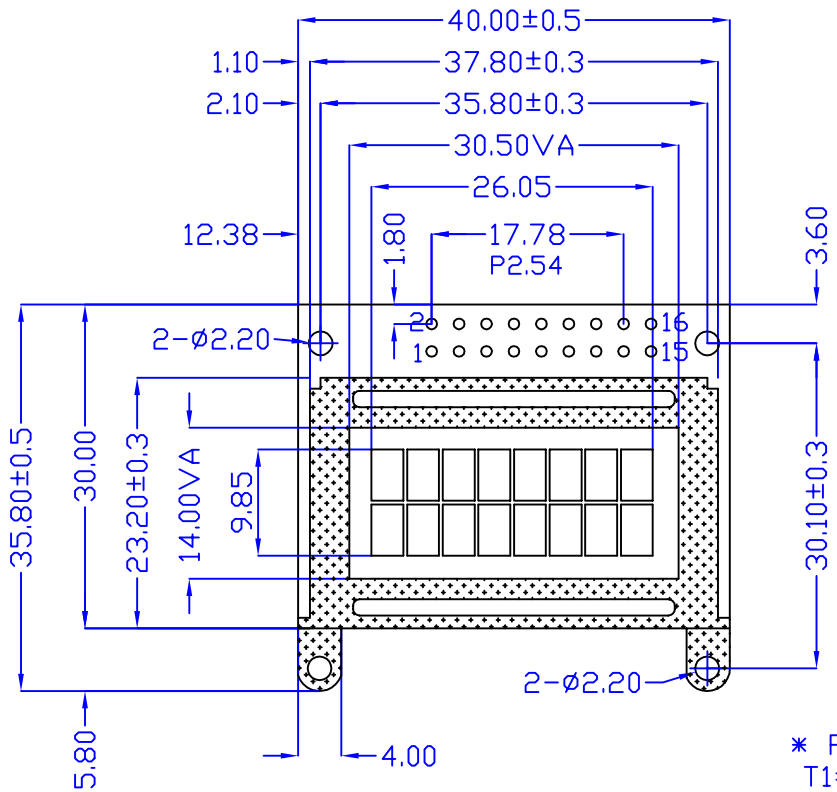

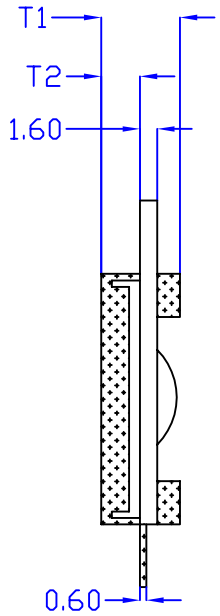

* FOR LED BACKLIGHT
T1=11.7MAX T2=8.3±0.3
* FOR EL OR NO BACKLIGHT
T1=7.30MAX T2=3.60±0.3

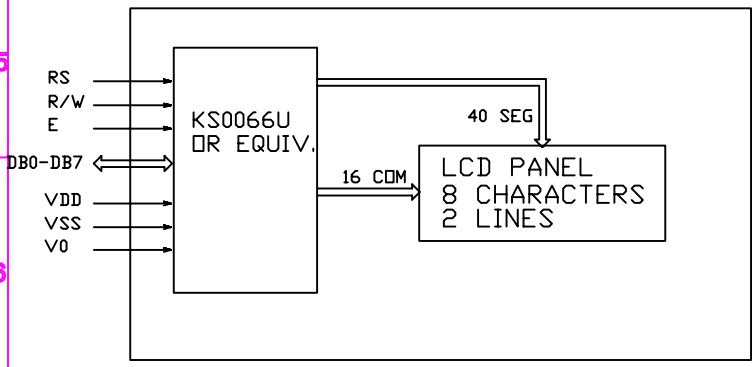

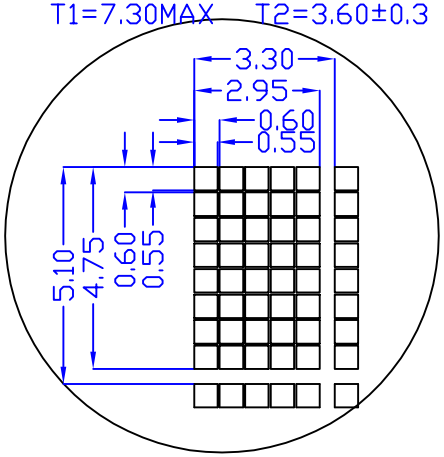

REVISIONS

NO.	DATE	BY	DESCRIPTION
1	02/08/11	A.CH	NEW RELEASE

PINS ASSIGNMENT

NO.	SYSBOL	DESCRIPTION
1	VSS	POWER SUPPLY
2	VDD	POWER SUPPLY
3	V0	OPERATING VOLTAGE FOR LCD
4	RS	DATA/INSTRUCTION SELECT
5	R/W	READ/WRITE CONTROL
6	E	ENABLE SIGNAL
7--14	DB0--DB7	DATA BUS
15	LED A	POWER SUPPLY FOR LED +
16	LED K	POWER SUPPLY FOR LED -

ABSOLUTE MAXIMUM RATING

ITEM	SYMBOL	MIN	MAX	UNIT
POWER SUPPLY(LOGIC)	VDD-VSS	-0.3	7.0	V
POWER SUPPLY(LCD DRV	VDD-V0	-0.3	13.5	V
INPUT VOLTAGE	Vi	-0.3	VDD	V

ELECTRICAL CHARACTERISTICS (VDD=5.0±0.25V, 25C)

ITEM		SYMBOL	MIN	TYP	MAX	UNIT
VOLTAGE FOR LOGIC		VDD-VSS	4.75	5.0	5.25	V
SUPPLY CURRENT		IDD	-	1.0	1.3	mA
VOLTAGE FOR LCD		VDD-V0	-	4.6	-	V
INPUT VOLTAGE	H	ViH	2.2	-	VDD	V
	L	ViL	-0.3	-	0.6	V
OUTPUT VOLTAGE	H	VoH	2.4	-	-	V
	L	VoL	-	-	0.4	V

MECHANICAL SPECIFICATIONS

ITEM	SPECIFICATION	UNIT
OVERALL SIZE	40.0W x 35.8H x 7.3T	MM
VIEWING AREA	30.5W x 14.0H	MM
CHARACTERS	8 CHARACTERS x 2 LINES	
CHARACTER SIZE	2.95W x 4.75H	MM
CHARACTER PITCH	3.30W x 5.10H	MM

OPTIONS

1. LCD TYPE: Y/G STN; GRAY STN; TN
2. BACKLIGHT: WITHOUT BACKLIGHT; EL
3. COLOR OF BACKLIGHT: Y/G; BLUE; WHITE
4. TEMPERATURE RANGE: NORMAL(0--50C)
   EXTENDED(-20--70C)
5. POWER SUPPLY: 5.0V; 3.0V
6. VIEWING ANGLE: 6H; 12H
7. CHARACTER TABLE: JAPANESE; EUROPEAN; CYRILLIC

NT-C0824A

8 CHARACTERS X 2 LINES

NELY

ALL DIMENSIONS ARE IN MM. TOLERANCE IS +/-0.2
UNLESS OTHERWISE NOTED.

NELY TECH CO.,LTD. WWW.NELYTECH.COM

NELY, YOUR SUPPLIER, AND YOUR PARTNER!